BODY, ROOF - Z26SPD92AN/AH/BN/BH (C750888)

2026 RZR - RZR PRO S ULTIMATE (R01) - Z26SPD92AN/AH/BN/BH

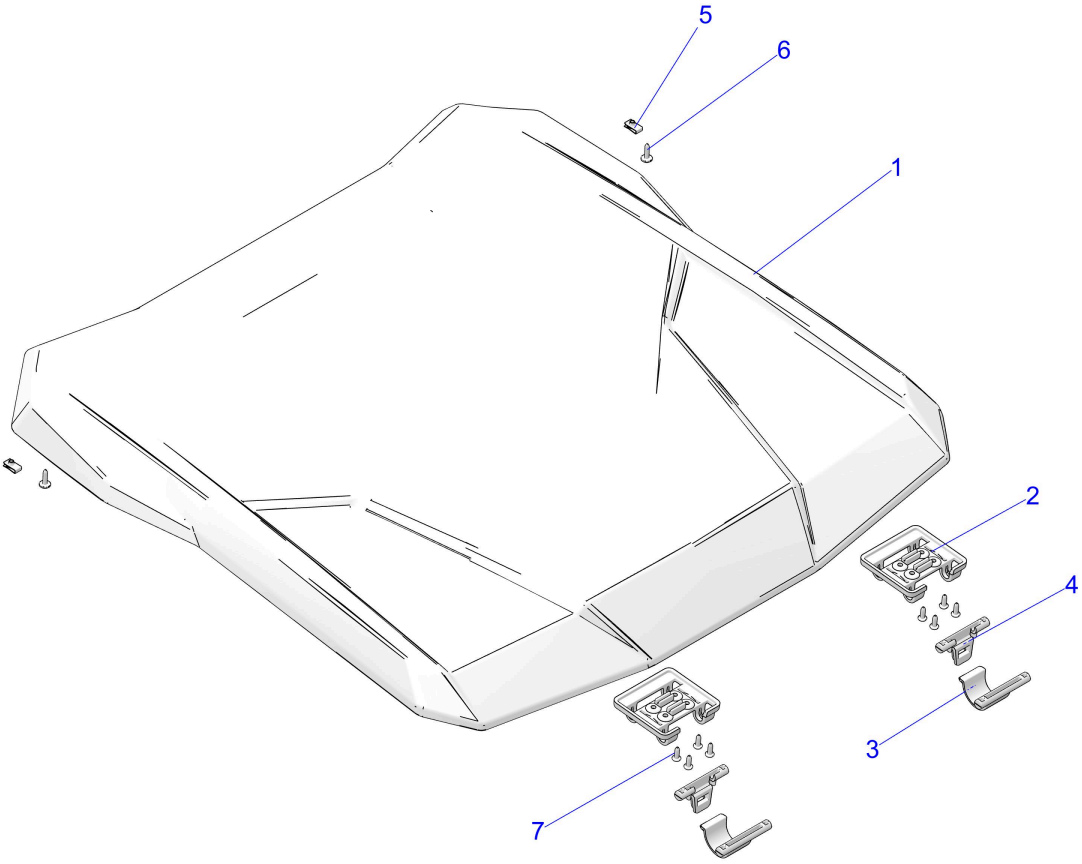

© 2025 Polaris Industries Inc.

C750888

Reference #	Part#	Description	Quantity
	2883928	K-ROOF,POLY,RZV [INCL. ALL]	1
	2207827	HDWR-ROOF,POLY,RZV [INCL. 2,6,7]	1
1	5455762	PANEL-ROOF,POLY,RZV	1
2	5455622	CLAMP-BASE,ROOF,RZV	2
3	5455623	CLAMP-HOOP,ROOF,RZV	2
4	5455624	CLAMP-LATCH,ROOF,RZV	2
5	7081305	CLIP-U SPEED NUT	2
6	7519650	SCR-TXTH-M6X1.0X25 ZFB	2
7	7519045	SCR-TX TRUSS-#14X3/4, HI/LO ZBK	8

Copyright 1996-2026 Polaris Industries U.S.A All rights reserved.